Rice Global E&C Forum, Houston, Texas

Managing Contraction and Stress in an Ambient Pressure Insulated 9%Ni Subsea Cryogenic Pipeline

C. Neal Prescott, Jeff Zhang

Fluor Offshore Solutions, USA

14 November 2008

FLUOR®

Acknowledgements

- Fluor Client
- Fluor Management
- Fluor Subsea LNG Pipeline Team
- Cabot Corporation
- Eisenbau Krämer
- Corus Tubes
- Brück
- Astro Technology
- Southwest Ocean Services / Sampson Rope
- Det Norske Veritas (DNV)
- American Bureau of Shipping (ABS)

Presentation Outline

- Offshore Transfer of LNG Options
- Ambient Pressure Insulated 9% Ni Steel Subsea LNG Pipeline Technology
- Key Technology Issues
- Case Study
- Conclusions

Typical Dock, Trestle & Pipelines

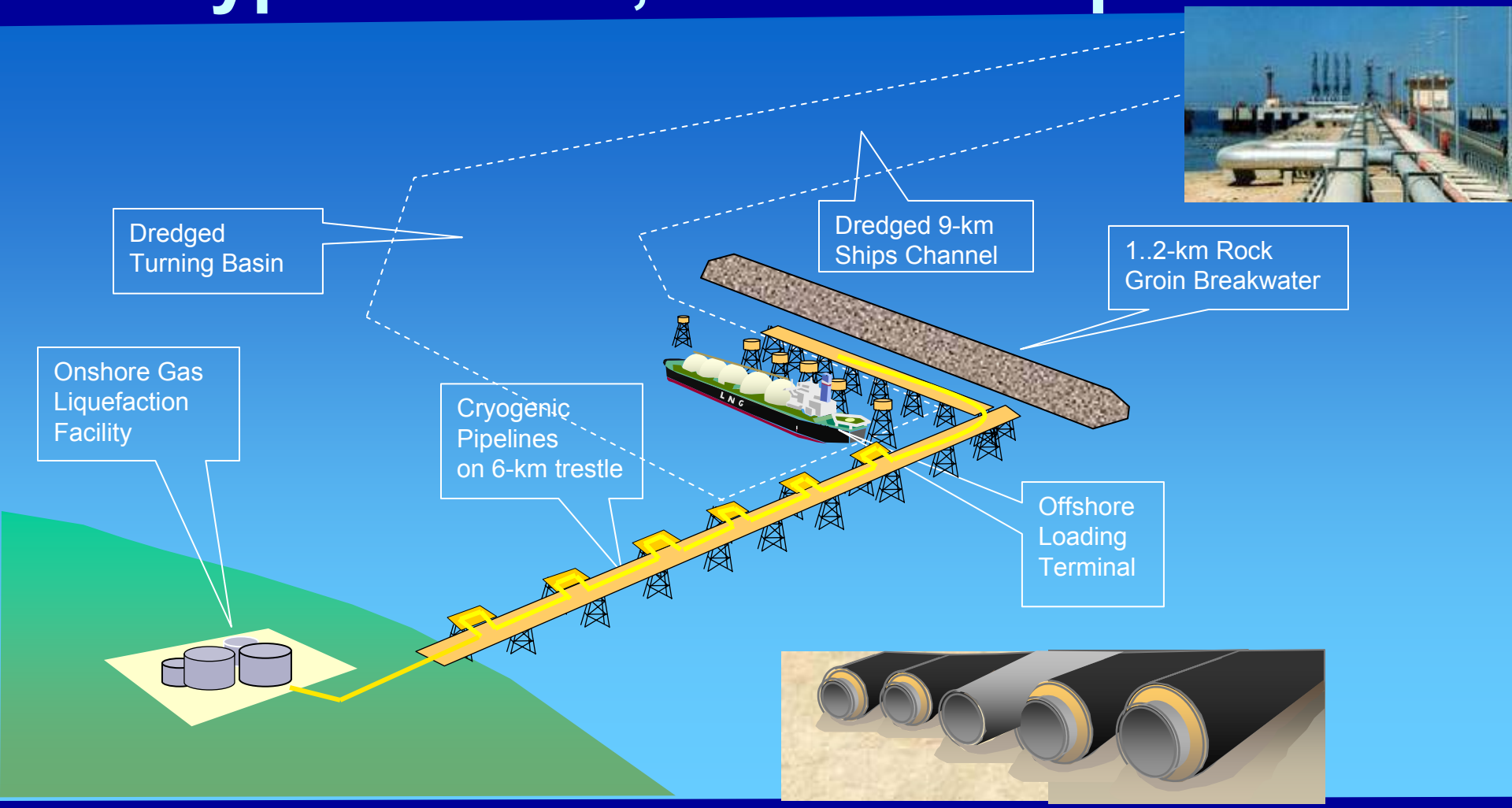

Offshore Trestles / Causeways (Fluor Case History)

- Aramco – Ju'Aymah LPG Terminal – Saudi Arabia
- 10-km trestle
- Mid-1970's
- Original trestle cost estimate $68 million
- Final installed cost $268 million
- Problems with pile driving and construction schedule.

Typical Dock, Subsea Pipelines

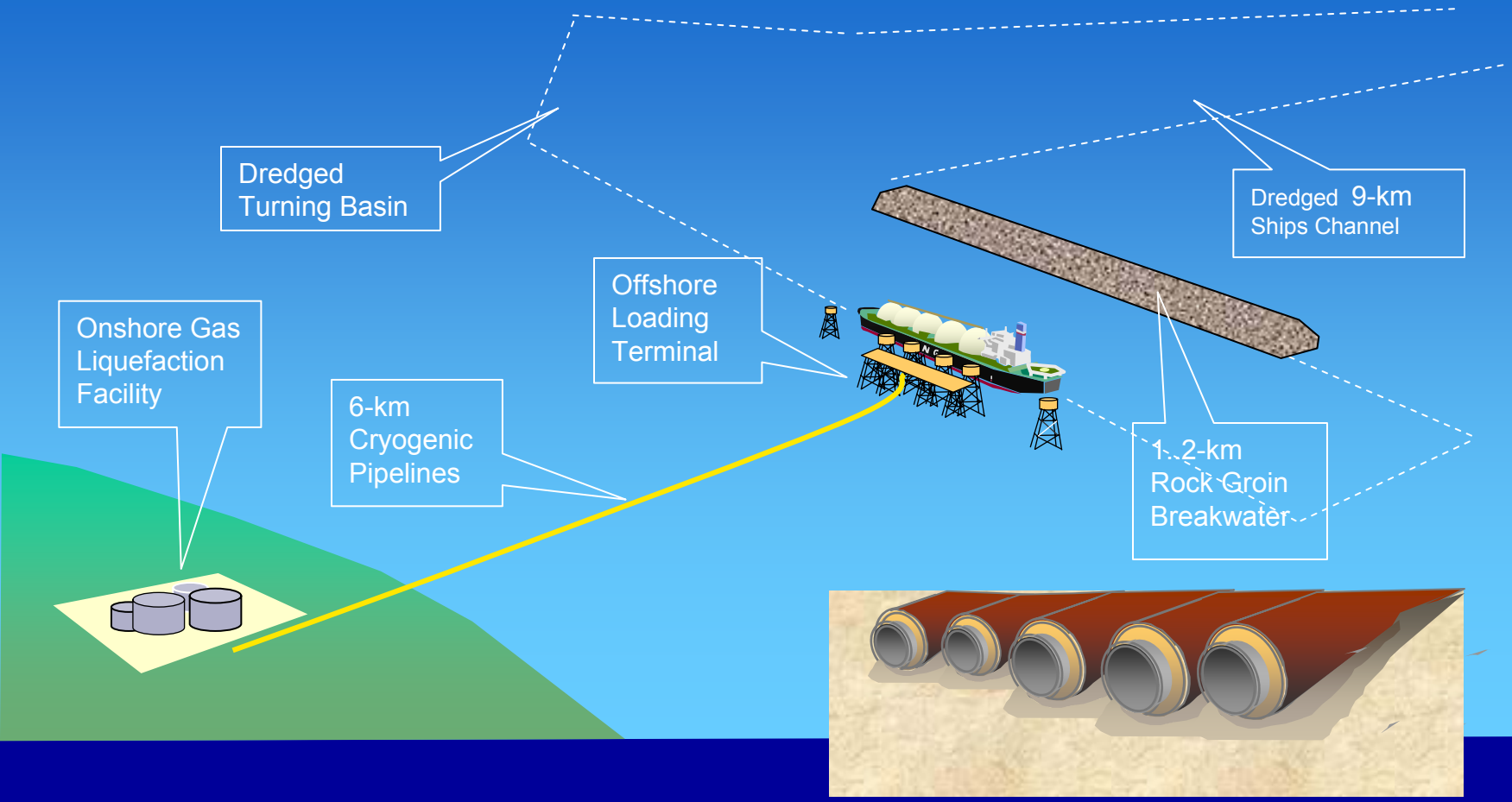

Ambient Pressure Insulated 9% Ni Steel Subsea LNG Pipeline

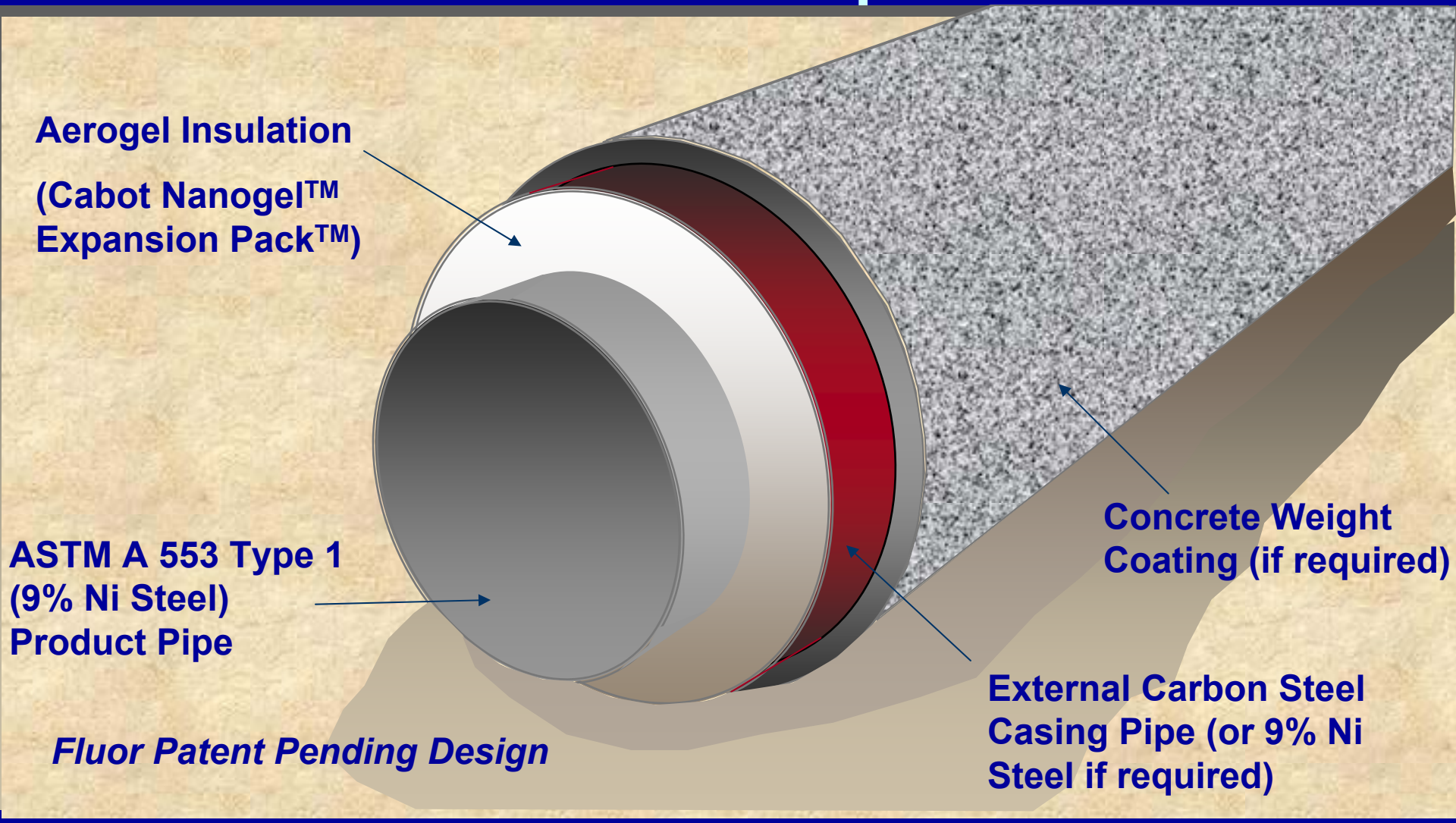

Fluor Patent Pending Design

Contraction Reduction – Bulkheads

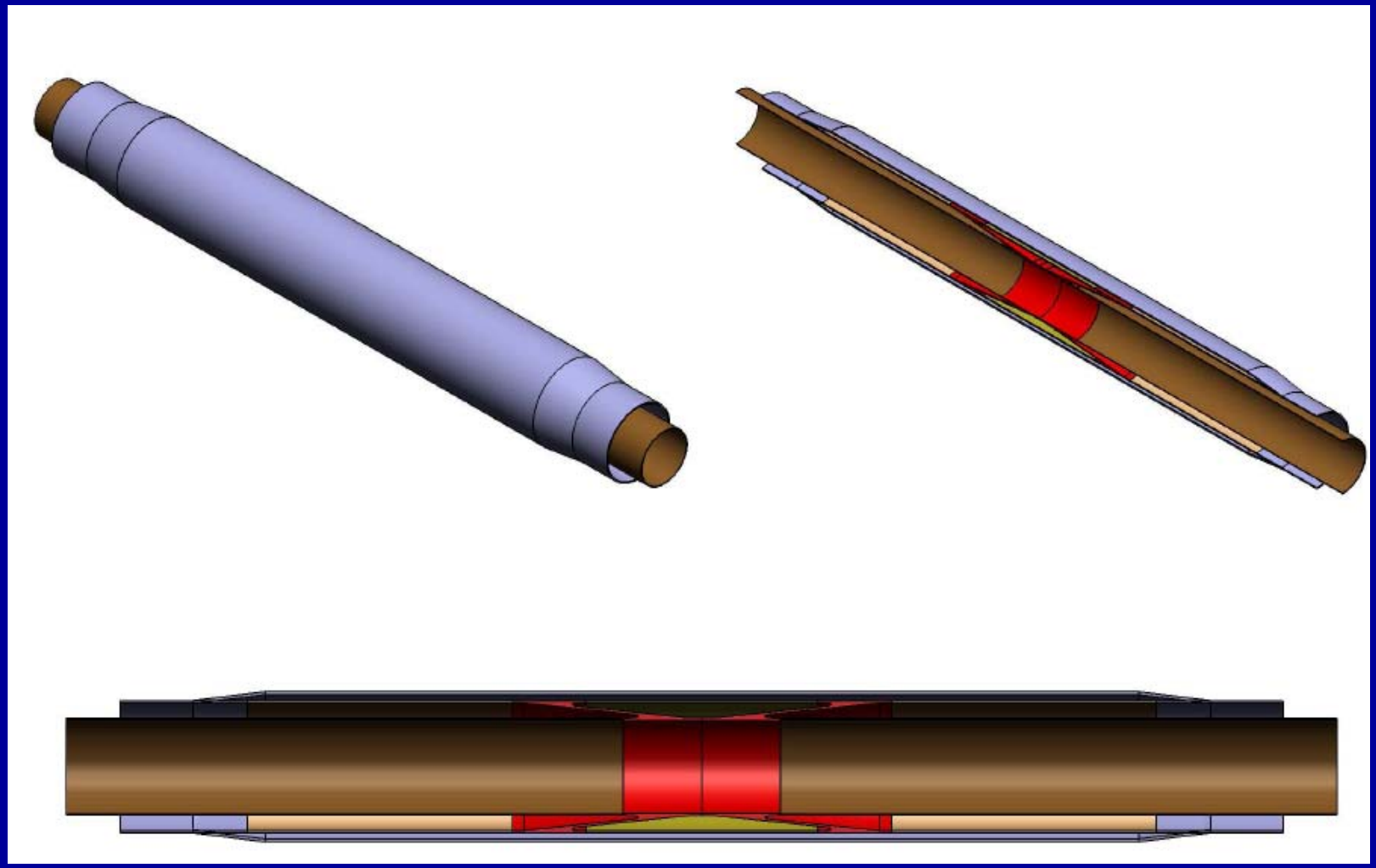

Ambient Pressure Insulated 9% Ni Steel Subsea LNG Pipeline Configuration

- 9% Ni Steel for Product Line
- 9% Ni Steel Bulkheads at Ends
- Ambient Pressure in Annular Space
  - Nitrogen filled, slight overpressure
  - Vent tubes
- Aerogel Insulation
- Monitoring System
- Simple Fabrication and Assembly, Proven Installation Techniques
- Fluor Patent Pending Design

Comparison of Pipe Material Costs

Material	Relative Cost	Yield Stress (MPa) @ 0°C	Yield Stress (MPa) @ -196°C
• Invar™ – 36% Ni	14	270	650
• 9% Ni Steel	6	585	847
• 316L Stainless Steel	5	250	400
• API X52 Carbon Steel	1	359	

Comparison of Costs

(7 km LNG Pipeline – Fluor and 3rd Party Studies)

Not to Scale

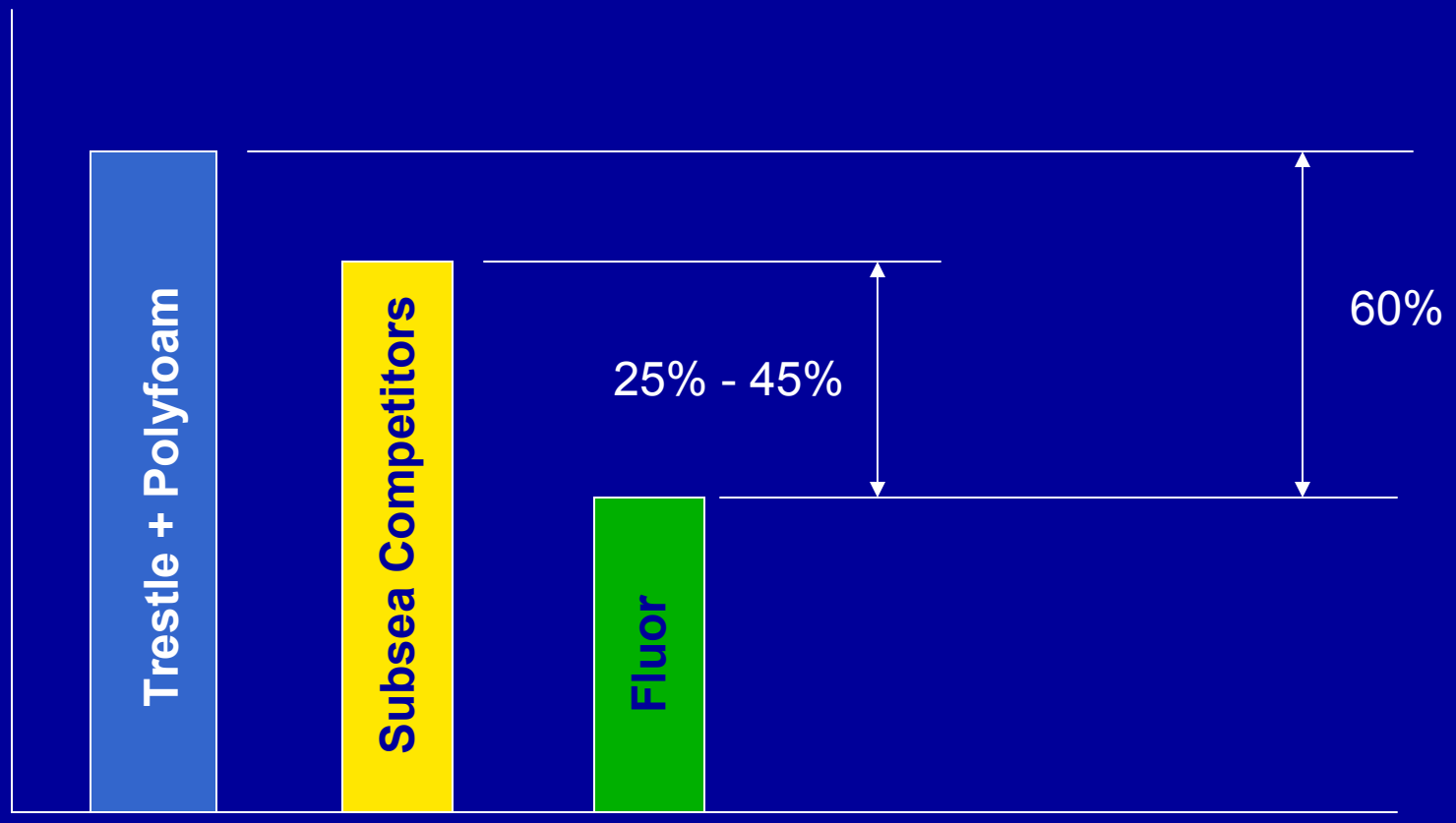

Key Technical Issues

- 9% Ni Steel
  - Welding Procedure
  - Weld Mechanical Properties
  - CTE Mismatch between Weld and Pipe
  - Bulkhead Fabrication Procedure
- Mechanical Integrity
  - Stress and thermal load on connecting systems
  - Contraction
  - Fatigue Life
  - Brittle Fracture
- Insulation Material
- **Recent Technology Developments Have Resolved All Issues**

9% Nickel Steel Pipe

- 9%Ni Plates
  - Have been widely used for cryogenic storage tanks since the 1960's.
  - Have proven to be well suited for cryogenic service.
- 9%Ni Pipe
  - EisenBau Krämer has 3 mills in Germany and are specialists in Longitudinal Welded Large Diameter Pipe

9% Ni Welding Technology Development

- EBK started development 5 years ago
- Numerous welding consumables and welding procedures investigated
- Welding Procedure now ready for project application
  - Matched plate strength
  - Applicable to both longitudinal and girth welds
  - CTE mismatch issue resolved
  - Welding Procedure qualified by ABS and DNV for longitudinal and girth welding

World's First 9%Ni Steel Line Pipe

9Ni Pipe during Production

Steel: ASTM 553 Type I

(Source: EisenBau Krämer)

9Ni Pipe Weld

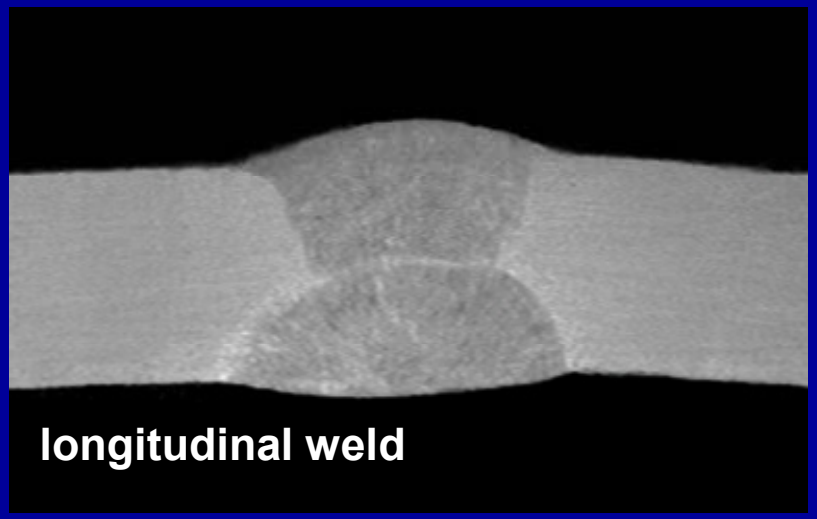

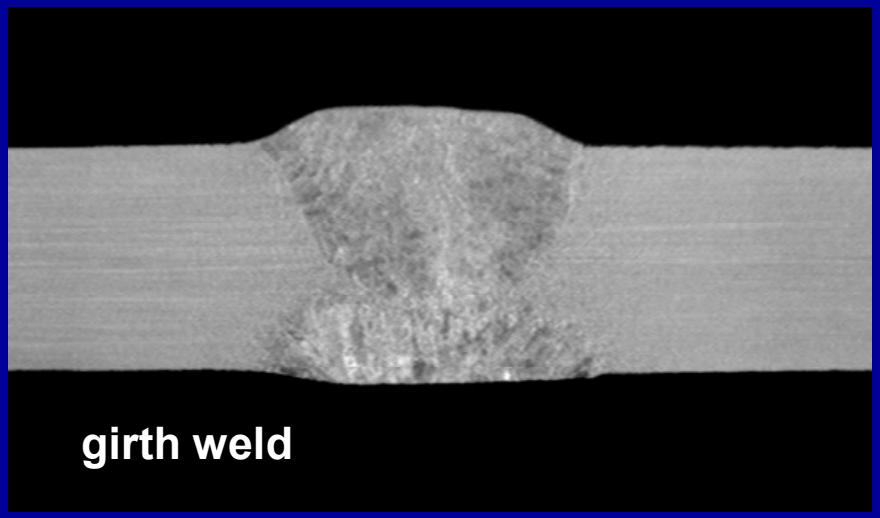

- Source: EBK , Stainless Steel World America 2008, Houston, 9-10 September 2008, Paper PS08040

9% Ni Welding Technology Development

- Corus Tubes started development 4 years ago
- Now manufactures 9%Ni Alloy Pipe on its UOE double submerged arc welded (DSAW) mill in Hartlepool, UK.
- Longitudinal Welding Procedure has been developed to generate material properties in the weld that exceed those in the parent plate.
- Girth Welding Procedure now being developed.

High-Efficiency Aerogel Insulation System

Cabot Nanogel® Expansion Pack™ Insulation System

Hydrophobic
Elastically Compressible
Low Conductivity

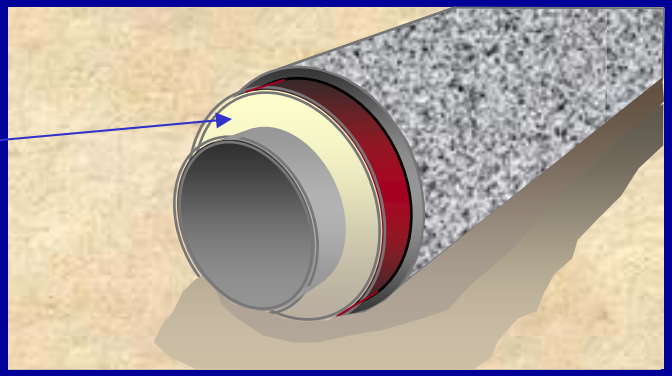

History of Aerogel

- 1931: Aerogel invented by Dr. Steven Kistler
- 1950: Monsanto commercialized an aerogel under trade name Santocell. Exited business in 1970 because of high production costs using old manufacturing method.
- 1950: First patent issued on use of aerogel for cryogenic storage tank by Air Products
- 1961: Patent issued to Chicago Bridge & Iron for aerogel in cryogenic storage tanks
- 1996: NASA uses aerogel for thermal insulation on Mars spacecraft
- 1996-1998: New cost-efficient aerogel manufacturing processes developed by Cabot and others
- 2004: Aerogel first used in deepwater subsea oil pipelines
- 2008: Cabot Nanogel Compression Packs to be used for world's longest aerogel-insulated subsea tieback in US Gulf of Mexico (Helix Danny project)

Nanogel Expansion Pack -Cryogenic Vibration Test

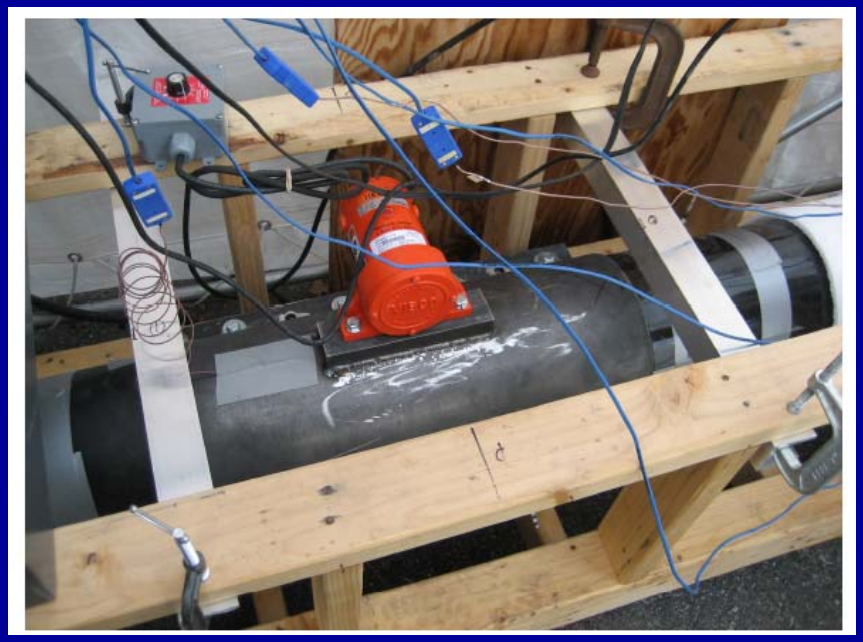

(Photo Source: Cabot Corporation)

This is one of the mechanical and thermal tests performed on Nanogel Expansion Packs to confirm suitability to LNG service

Case Study

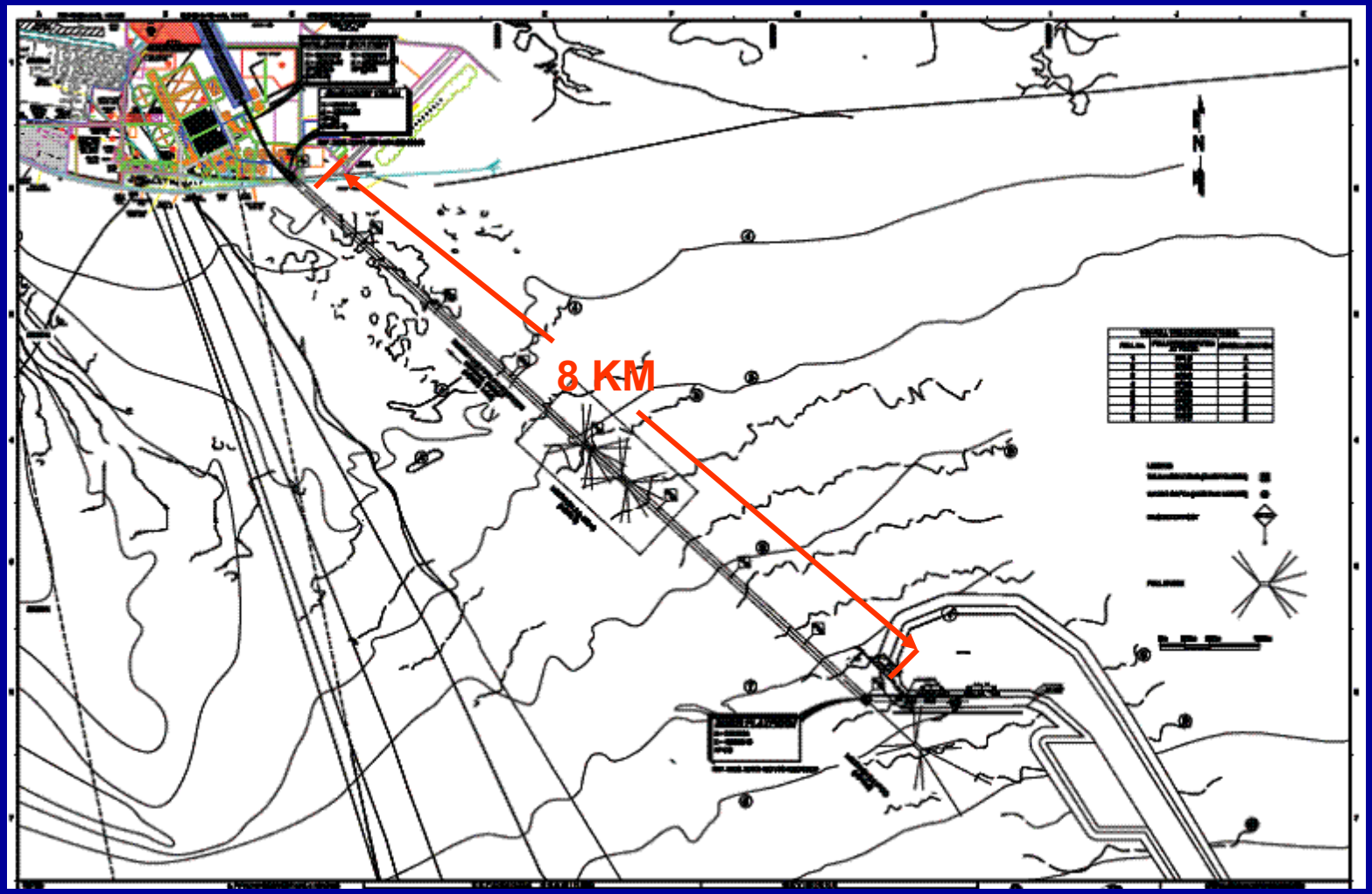

Pipelines

- LNG Pipelines (2)
- LPG Pipelines (2)
- LPG Cool-Down Pipeline
- LNG BOG Return Pipeline
- Utilities Pipelines (10)
- Power and Communication Cables (2)

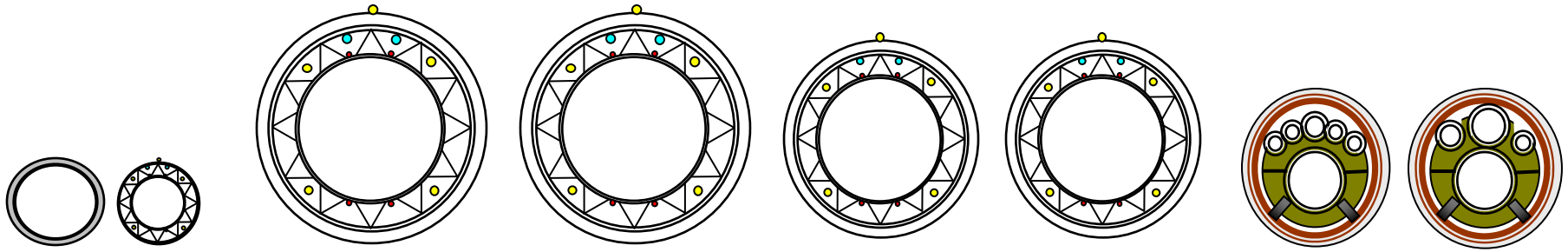

Monitoring System

- Multiple Redundancies for Highly Reliability Temperature Measurements along Pipeline
- Leak Detection by Temperature and Annulus Pressure
- Intrusion Detection
- Bulkhead Monitoring
- PLET Monitoring
- Annulus Venting

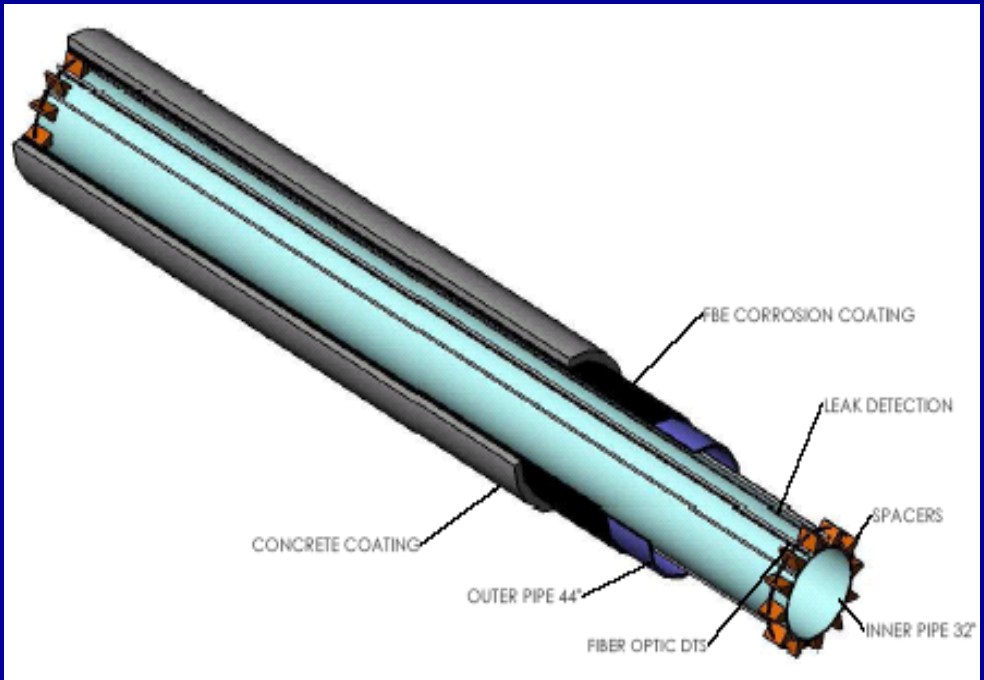

Redundancies and Safety Margin

- Strength of 9% Ni Steel
  - SMYS at room T used in the design
- Bulkheads: inherent 100% redundancy
  - Two conical sections
- Fatigue life
  - 900 times the number of likely complete full thermal cycles (10)
- Monitoring System

Thermal Hydraulic Performance

- Loading
  - Satisfies Pressure and Heat Gain Limits
  - LNG Pipeline: OHTC = 0.107 $W/m^2/K$ including spacer effect
- LNG Recycle
  - Boil-Off Gas Rate Satisfactory
- Commissioning: One Week Duration
- Natural Warm-Up: One Month
  - LNG purging can expedite warm-up

Pipeline Contraction and Stress

- Software
  - ABAQUS FEA software for main pipeline
  - AUTOPIPE for connection piping
- Multiple end condition (anchored/free) combinations
- Parameters sensitivity studies: soil, burial, dimensions, length, water depth

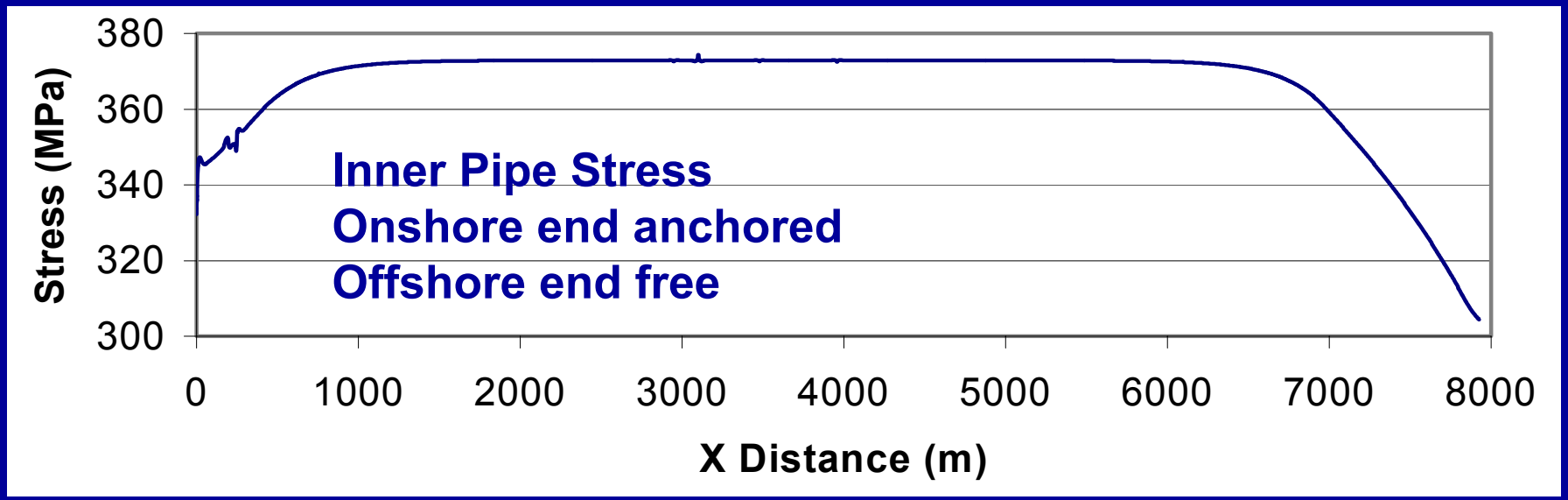

Pipeline Analysis Results

- 32”X44” LNG Pipeline, Onshore Anchored, Offshore Free
  - Max inner pipe stress 374 MPa 64% SMYS
  - Max outer pipe stress 106 MPa 24% SMYS
  - Offshore end displacement 200 mm
  - Onshore anchor displ. 62 mm
  - Onshore anchor load 4351 kN
  - Pipeline max vert. displ. 15 mm
- Pipeline stress within limit, and contraction acceptable for all sensitivity cases, and for other dimensions and length

LNG Bulkhead FEA Analysis

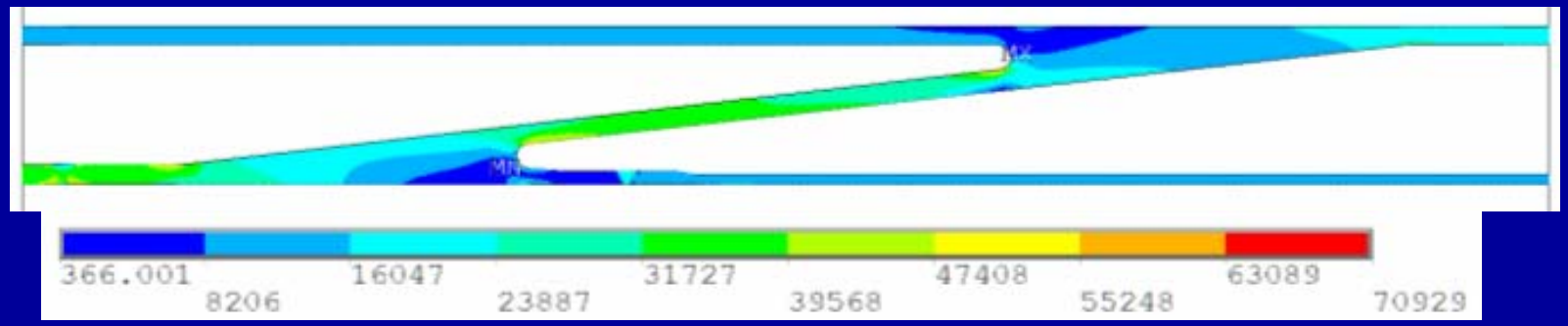

- **Stresses well within allowable values**
- **Linearized Stress is used in ASME Code to compare with Allowable**

Component		Linearized Stress M+B (psi)	ASME Code Allowable Stress Sps (psi)
Bulkhead	acceptable	52080	100000
Casing Pipe	acceptable	19150	66000
LNG Pipe	acceptable	46440	100000

LNG Bulkhead Buckling Calculation

- Compressive forces in split-sleeve are checked for buckling
  - Maximum compressive stress is 10817 psi
  - Well below limit of 43308 psi
  - No Risk for Buckling

LNG Bulkhead Brittle Fracture Calculation

- Brittle fracture analysis per API 579 considered due to low product temperature
- Bulkhead radius and LNG pipe-to-bulkhead weld are critical areas
- Assumed 360° circumferential flaw with depth of ¼ thickness
- Factor of 2.0 applied to stresses at welds to account for discontinuities at or near surface.

LNG Bulkhead Brittle Fracture Calculation

Fatigue/strength results fall within accepted values.

Component		OD (in)	t (in)	Crack Size (in)	T (°F)	K_1 (ksi·√in)	K_{1C} (ksi·√in)	CVN (ft·lbs)
Bulkhead Radius		37.0	0.75	0.1875	20	59.16	105	73
Bulkhead Welds	Inner Pipe	32.0	0.375	0.09375	-256	59.18	70	33
	Mid Bulkhead	32.5	0.75	0.1875	-256	53.48	70	33
	Mid Leg	38.0	0.75	0.1875	-93	40.42	70	33
	Outer Casing	44.0	0.75	0.1875	37	0.112	70	33
	Outer Pipe	44.0	0.75	0.1875	53	24.72	53	20

LNG Bulkhead Fatigue Calculation

All allowable cycles are well above the defined cycles for each event.

Location	FSRF	Cycle	Maximum Stress Range (psi)	Number of Design Cycles	Cycles to Failure
Bulkhead Radius	1.0	Start-Up/Shut-Down	84665	10	12326
		Recirculation	8517	3176	below endurance limit
Bulkhead/Casing Pipe Weld	2.0	Start-Up/Shut-Down	19460	10	97392
		Recirculation	2390	3176	below endurance limit
Bulkhead/Inner Pipe Weld	2.0	Start-Up/Shut-Down	54450	10	8996
		Recirculation	5307	3176	below endurance limit

Design Code /Criteria Check

Issue	Analysis Results	Applicable Codes/Notes
Pipe Stress - Longitudinal	Max Stresses: Inner Pipe = 374 MPa (64% SMYS) Outer Pipe = 120 MPa (27% SMYS)	**ASME B31.4** Allowable = 80% SMYS
Bulkhead Stress	Max. Stress = 359 MPa	**ASME Sec VIII Div 2** Allowable = 3 X Sm = 100 ksi (690 MPa) Membrane+ Bending Stresses Small local plastic region allowed per code
Fatigue	Min fatigue life: Bulkhead 8996 Full thermal cycles	**ASME Sec VIII, Appendices 4 and 5** Fatigue life conservatively based on carbon steel curve.

Design Code/Criteria Check

Issue	Analysis Results	Applicable Codes/Notes
Brittle Fracture	Bulkhead radius: 0.1875" deep defect allowed K_1 = 59.2 ksi*in$^{1/2}$ Bulkhead welds: 0.09375" deep defect allowed at inner pipe K_1 = 59.2 ksi* in$^{1/2}$	**API 579** Bulkhead radius: Allowable K_{1C} = 105 ksi* in$^{1/2}$ Bulkhead welds: Allowable K_{1C} = 70 ksi* in$^{1/2}$
Buckling	Max stresses: Split sleeve = 74 MPa compression	**ASME Code case 2286** Max Allowable Stresses: Split Sleeve = 300 MPa (local) 299 MPa (column)

Fabrication

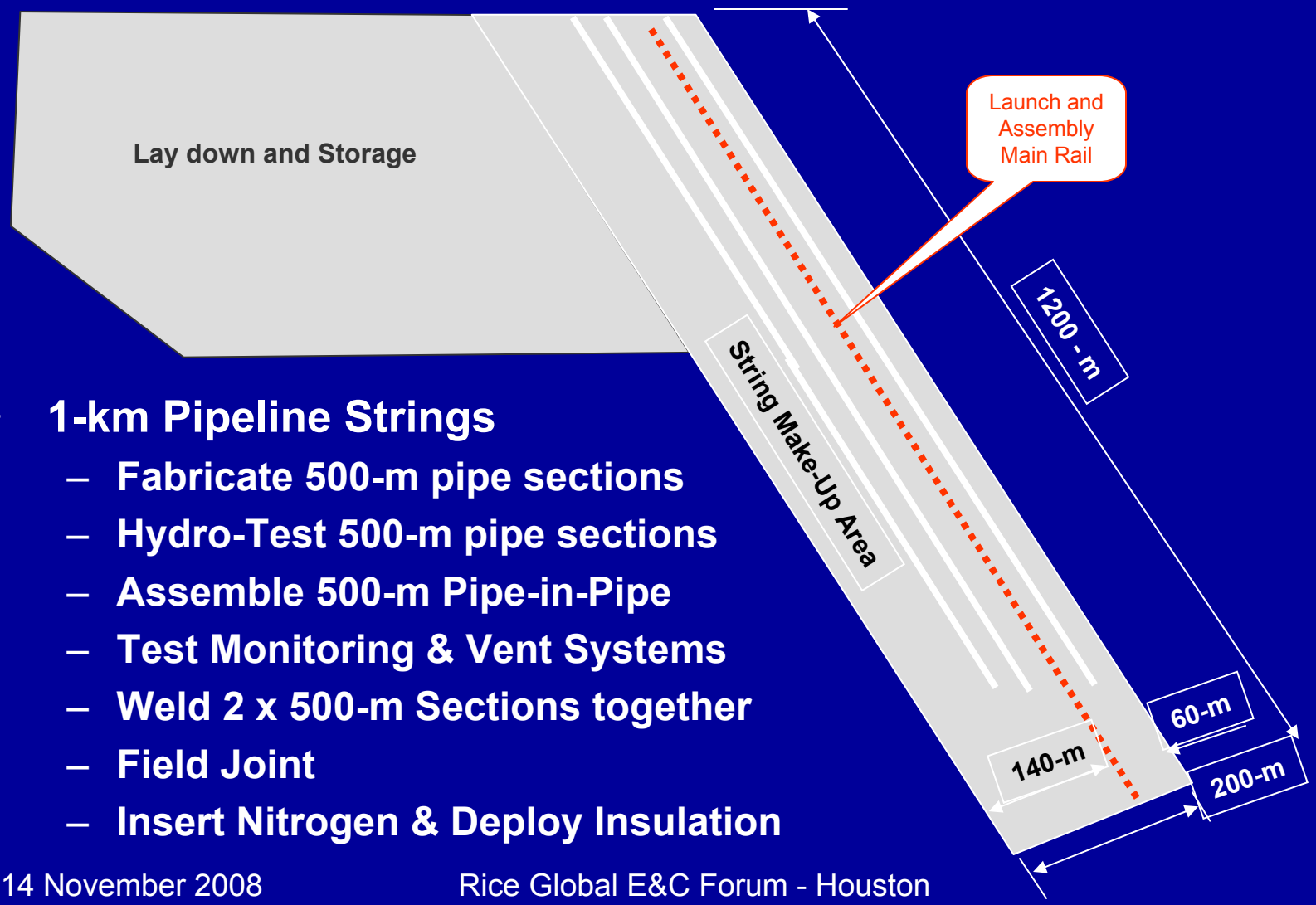

- **1-km Pipeline Strings**
  - **Fabricate 500-m pipe sections**
  - **Hydro-Test 500-m pipe sections**
  - **Assemble 500-m Pipe-in-Pipe**
  - **Test Monitoring & Vent Systems**
  - **Weld 2 x 500-m Sections together**
  - **Field Joint**
  - **Insert Nitrogen & Deploy Insulation**

Layout of Fabrication Facility

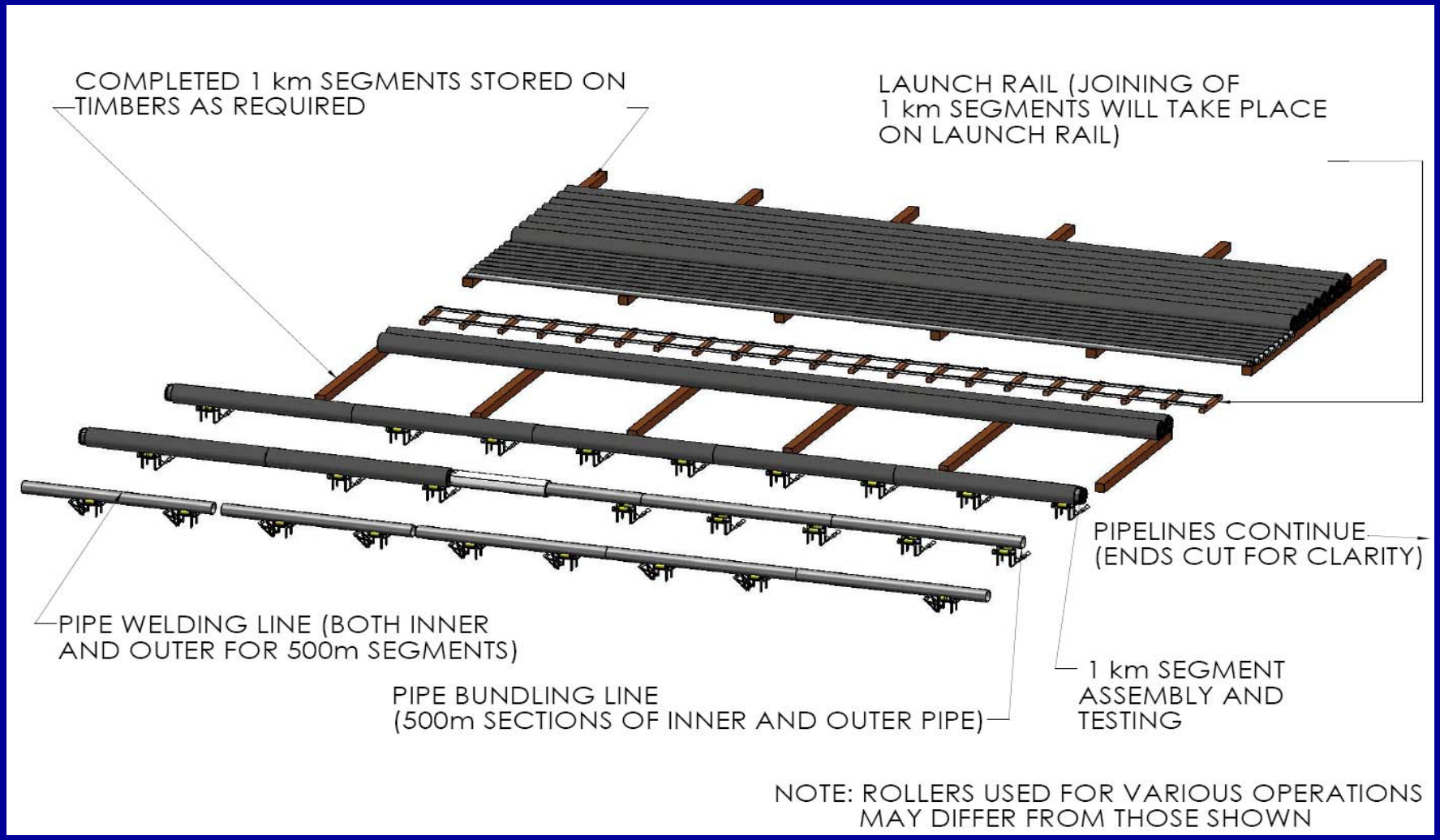

Pipeline Installation - Pulling

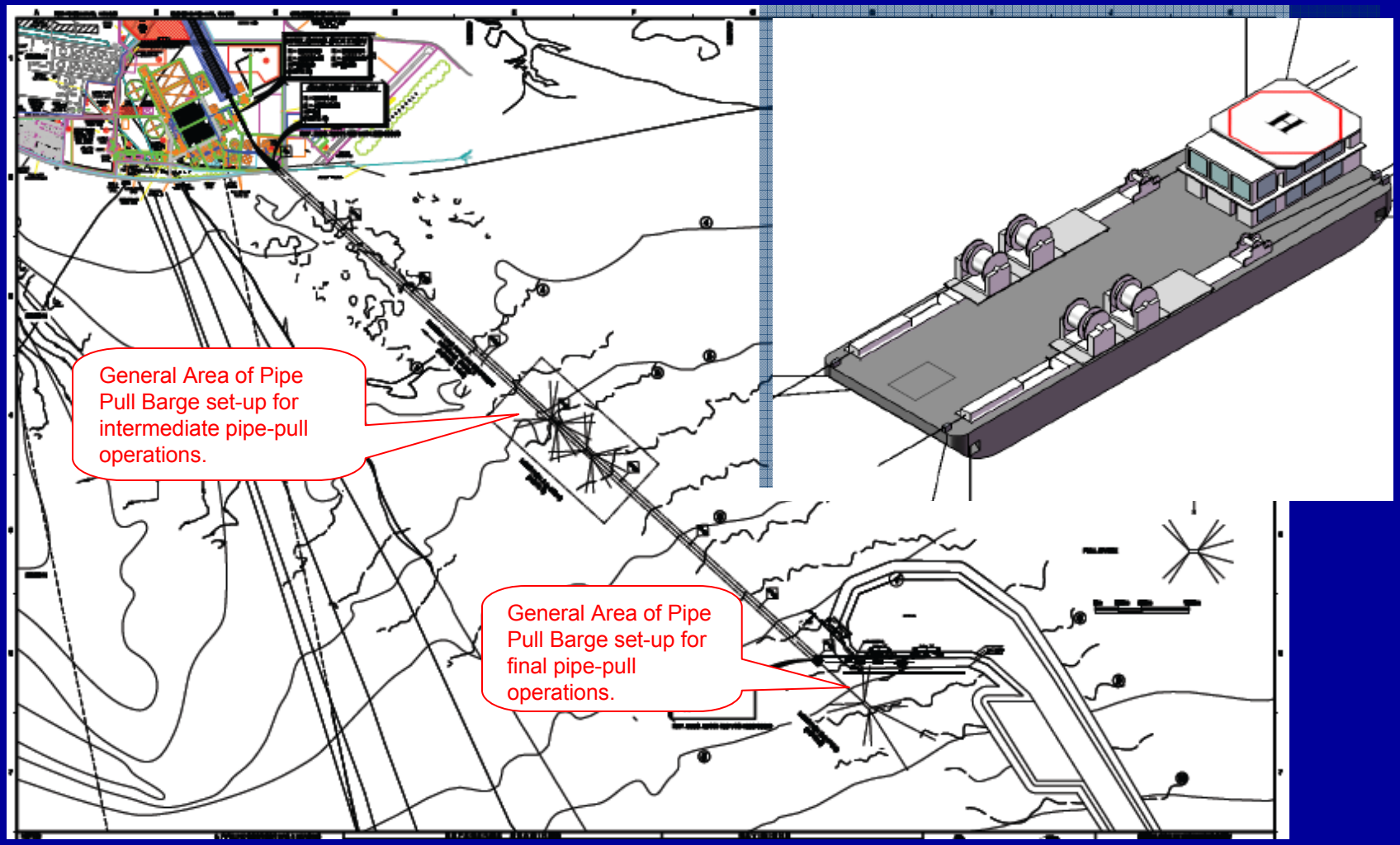

Heavy Lift Barge for PLET and Platform Installation

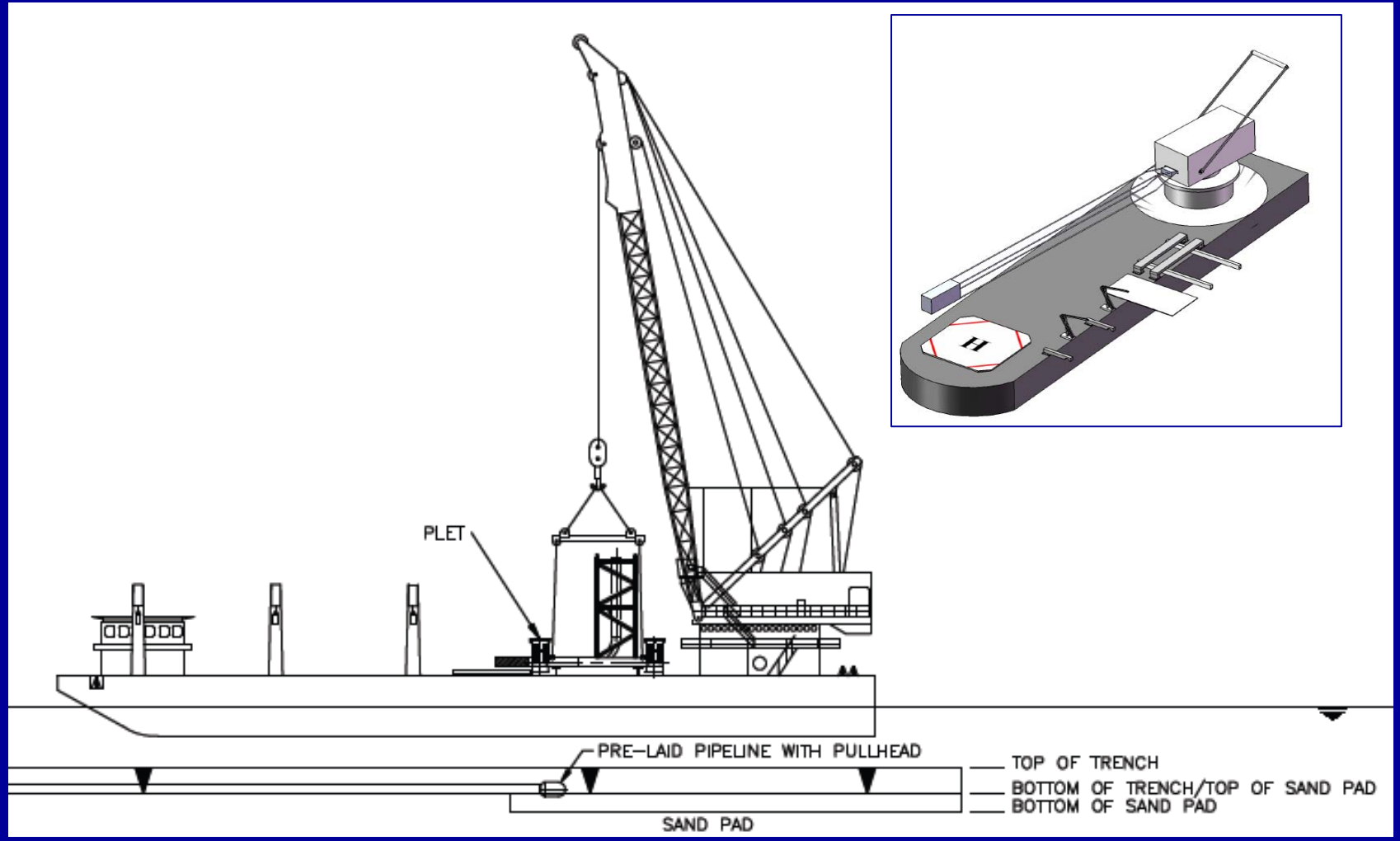

Qualification by Certification Agencies

- ABS
  - Approval in Principle Issued April 2006
  - Fit for Service Certificate Issued October 2008
- DNV
  - Approval in Principle Issued March 2006
  - In final review for issuing Fitness for Service Certificate; expected date is end of Nov 2008

American Bureau of Shipping

FIT FOR SERVICE APPROVAL CERTIFICATE

Ref: OPN 1503651 - FFS
Date: 03 October 2008

THIS IS TO CERTIFY that the specification for design and manufacture for the equipment listed below have been reviewed and found to be in compliance with the ABS Guide for the Subsea Pipeline Systems and Novel Concept Guide as mentioned in ABS letter dated 03 October 2008, subject to compliance with the comments in the aforementioned letter, reports and the ABS Rules. All drawings, calculations and test reports for components are to be found acceptable to ABS.

Designer: **Fluor Corporation,** One Fluor Daniel Drive, Sugar Land, Texas, 77478, USA

System : Subsea Liquefied Natural Gas (LNG) Pipe-in-Pipe Pipeline.

System Description: Pipeline major components are:

- 9% Ni Steel Inner Pipe
- Carbon Steel Outer Pipe
- 9% Ni Steel Bulkheads at Shore and PLET
- High Efficiency Aerogel (Cabot Corporation's Nanogel Expansion Pack or Equivalent)

ABS Guides and Rules:

- ABS Guide for Building and Classing Subsea Pipeline Systems 2006
- ABS Guidance Notes on Review and Approval of Novel Concepts, June 2003
- International Code for the Construction and Equipment of Ships Carrying Liquefied Gases in Bulk (IGC Code)

Harish N. Patel
Manager
Emerging Technologies Department
ABS Americas Houston

Note: This certificate evidences compliance with one or more of the rules, Guides, standards or other criteria of American Bureau of Shipping or a statutory, industrial or manufacturer's standards and is issued solely for the use of the Bureau, its committees, its clients or other authorized entities. Any significant changes to the aforementioned product without ABS approval will result in this certificate becoming void. This certificate is governed by the terms and conditions in the ABS Rules.

Conclusions

- Technology breakthrough on welding enables the application of 9% Ni steel in subsea LNG pipelines
- The Case Study on the ambient pressure insulated 9%Ni steel subsea LNG pipelines show that
  - The stresses in the LNG pipe and bulkheads satisfy design codes with significant margins
  - Contraction are acceptable
  - Fatigue life is 900 times the number of thermal cycles likely to be encountered
  - Thermal performance is satisfactory
- The pipeline technology provides significant cost advantage
- The pipeline technology has received Fit for Service certification, is ready for project use

Thank You!

Discussion

C. Neal Prescott

Executive Director Offshore Technology

Neal.prescott@fluor.com

+1 (281) 263-3361

Dr. Jeff Zhang

Manager, Subsea & Deepwater Technology

Jeff.zhang@fluor.com

+1 (281) 263-8556

FLUOR®